Introducing the **Axe**

by

SKYFLY

No borders, no barriers, no limits – just infinite opportunities.
*Introducing the **Axe** 2-seat personal vertical take-off and landing EV.*

The Axe - a prototype-proven 2-seat electric vertical lift aircraft.

Unique Design

- Take-off and land vertically or like a conventional fixed-wing aircraft
- Hover with ease - advance flight controller for automatic stabilisation
- No rotating wings or motors - safer, lighter simpler, stronger

Safety

- 4 x redundant flight control system
- 8 x motors for redundancy in the hover
- Wings enable 9-1 glide ratio
- Ballistic parachute
- Advanced flight controller enables auto-stabilised hovering and auto-land in emergencies

Cost effective

- Affordable at £150,000+VAT
- 80% lower running costs against comparable aircraft
- Ideal training aircraft to supply demand of E-VTOL taxi pilots needed soon
- Efficient design outperforms most other E-VTOL aircraft

Quick to market (2024) with Innovative certification and build approach

- Fixed wing design enables certifying and licensing the aircraft via existing certification routes in kit built/very light aircraft /experimental aircraft sectors (UK BCAR section S).
- No lengthy commercial certification - aircraft focussed on private owners not commercial operators
- Experienced engineering and design team that have designed, built and certified thousands of aircraft
- Not re-inventing the wheel - we are using established market leaders to supply control systems, batteries and electric motor technology
- Gearing up for production 2024

You have arrived. Faster, greener, safer, smarter.

Fly in style with beautiful views, rise above it all in your ***Axe*** *2-seat personal vertical take-off and landing EV.*

SKYFLY

Table of contents

What is the **Axe** by Skyfly?

The Axe is a 2-seat, electric/hybrid vertical takeoff and landing aircraft. Use it like a car but live without traffic jams, reduce travel time and enjoy the beautiful views from above. Arrive in style. Whether you commute to work, fly to your country home for the weekend, or want an aircraft for your super-yacht, the Axe is an affordable, quiet, sustainable, energy efficient and most importantly, a safe aircraft. The whole design has been focussed on the private user and tailored to their requirements.

Why is the **Axe** different to other E-VTOL aircraft?

The Axe uniquely does not have rotating engines or rotating wings. The angle of the propellers is set forward at an angle. The benefit of this design is that it saves weight and doesn't require a complex rotating system that is prone to failure and requires maintenance, all of which leads to a reduced cost. The Axe keeps it simple, strong and light with only a 10% reduction in forward flight efficiency. All of this contributes to heightened safety and is a key factor behind the Axe being the most sustainable personal mobility solution.

Main Features

4 x redundant flight control system

Conventional mechanical control surfaces

9:1 glide ratio

Unique anti-stall canard design

Safe and reliable fixed angle motors

8 x redundant brushless electric motors

Multiple independent Lithium-ion battery packs

Removable wings for ease of storage and transport

Wings to provide lift during forward flight, increasing battery endurance, speed and ability to glide in emergencies

Manual mechanical controls on aerodynamic surfaces

2 x 35 KW dual redundant electric brushless outrider motors

2 motors in a single housing per wing-end for single-failure tolerant architecture


100 miles (fully electric)
200+ miles (hybrid)
Range
2 pax
Passengers
100 mph
Cruise speed
You wish the journey was longer. Faster, greener, safer, smarter.
SKYFLY

No borders, no barriers, no limits – just infinite opportunities.

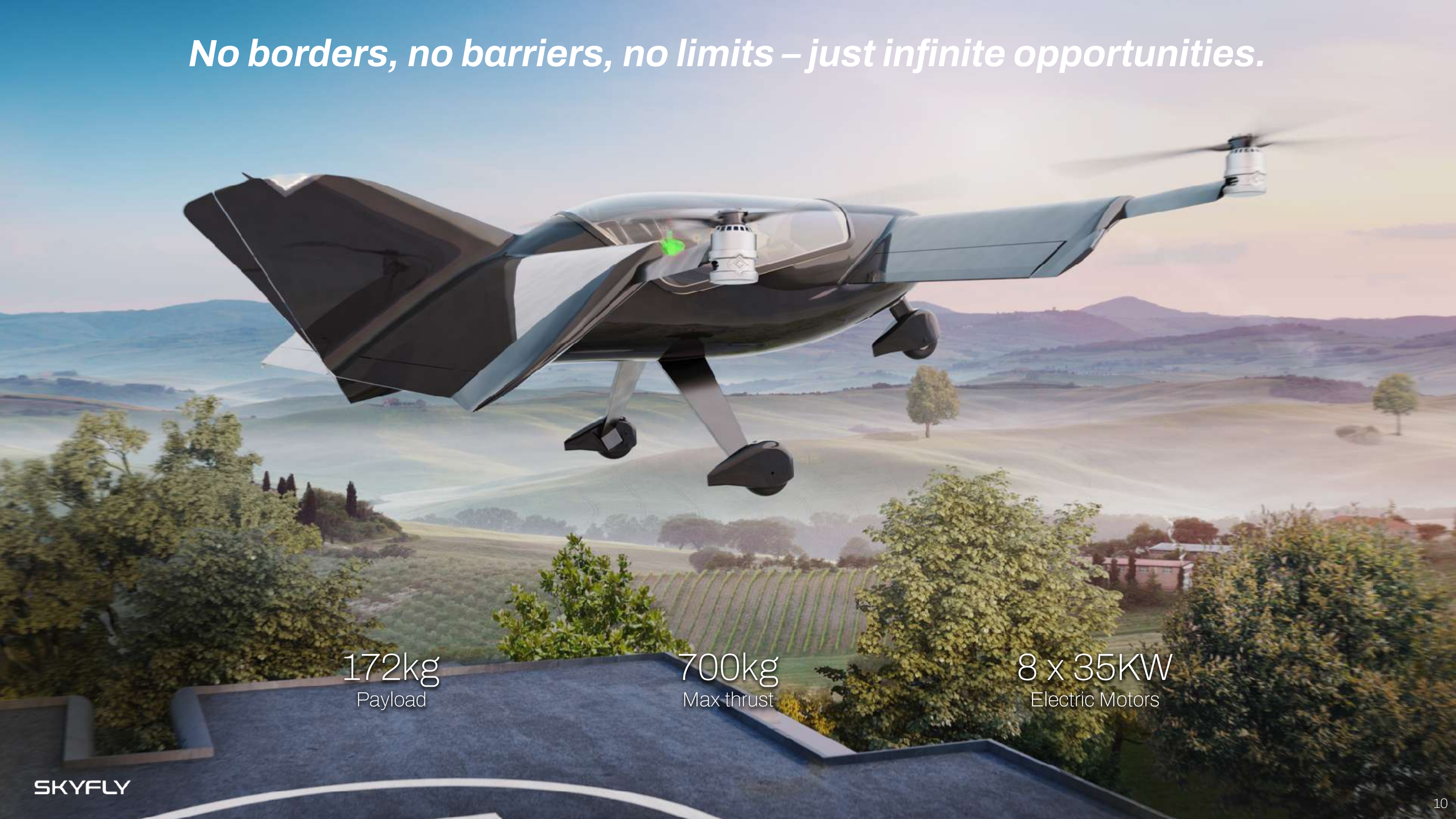

172kg
Payload

700kg
Max thrust

8 x 35KW
Electric Motors

SKYFLY

Private Owners

For years, vertical flight has often been regarded as dangerous and high cost which has often led more pilots to opt for a fixed wing aircraft licence or no licence at all. The Axe by Skyfly offers a safe, easy to use and affordable solution to attract new pilots from both fixed wing aircraft and rotary aircraft backgrounds.

Cost

The cost of running electric aircraft is cheaper than piston or turbine aircraft. Electric motors have fewer moving parts, require less maintenance, and cheap(er) electricity means costs may fall by more than half of existing piston and turbine alternatives. Through the Permit to Fly route of certification, costs are dramatically reduced as you are not tied into expensive, 25, 50 and 100 hour mandatory servicing schedules at designated service centres that often burden private owners. Also, you can carry out your own maintenance.

Usability

Traditional vertical flight (helicopters) requires a high level of skill from the pilot with some pilots not being able to get past the hover in training. This is often why pilots opt for a fixed wing license rather than getting their helicopters pilots license. The flight controllers in the Axe aircraft provide the pilot with a lower work load and minimal flight control inputs, with the flight controller doing the majority of the heavy lifting - especially in high winds. If you can fly a small consumer drone, you can fly the Axe aircraft.

Safety

Multiple motors enables you to have redundancy in critical flight phases. If one motor fails, you can still fly safely. Compared to a single engine helicopter where there is only a single source of power, distributed propulsion is a proven safety feature. Furthermore, brushless electric motors compared to conventional piston or turbine engines have far fewer moving parts and critical components that can fail. Finally, with the Axe you can glide like a fixed wing in emergencies and have the back-up of a ballistic parachute.

European Private Pilot Market

Est. £46 Billion

UK Private Pilots

There are approx. 35,000 UK Registered Pilots and around 20,000 UK Registered GA Aircraft.

There is also an influx of around 3500 new pilots each year that are looking to purchase aircraft.

This offers an estimated £6.9 Billion Market Value

European Private Pilots

Based on information provided by the NAA, 103,063 GA aircraft are registered and 185,123 pilot licences were delivered for 2014 in Europe.

Whilst there is little published data across Europe, based on growth trends, this figure can be assumed to be over 200,000 pilots.

This offers an estimated £40 Billion Market Value

"The Ultralight and Light Aircraft Market is projected to grow from an estimated USD 5.5 billion in 2020 to USD 11.6 billion by 2030, at a CAGR (compound annual growth rate) of 7.7% during the forecast period. This is due to the increasing number of high net worth individuals, upcoming new aircraft programs, and ageing aircraft. Though the market has witnessed a slow growth in recent years, aircraft with Vertical Take-off and Landing (VTOL) capability and environment-friendly propulsion technologies, including electric and hybrid engines, are expected to reduce the operating costs drastically and serve as an opportunity for the market growth up to 2030."

Sources – Civil Aviation Authority, NAA, Markets and Markets

Training Organisations

The Axe is the go-to training aircraft to deliver effective pilot training to facilitate the rising demand for E-VTOL aircraft pilots. With the aircrafts 2-seat side by side layout, the aircraft is perfectly suited for training new pilots.

Cost

The cost of running electric aircraft is cheaper than piston or turbine aircraft. Electric motors have fewer moving parts, require less maintenance, and cheap(er) electricity means costs may fall by more than half of existing piston and turbine alternatives. The Permit to Fly regime offers more flexibility on costs and means that the Axe can be maintained and inspected, and have their Permits to Fly renewed annually, by the Light Aircraft Association. Flight training organisations are not tied into expensive service centres.

Usability

The aircraft is fitted with a removable battery module which enables you to continue flying, even when the main battery has run out. This enables you to have shorter charge times on your main battery pack and quicker turnaround times on the ground. If equipped with a hybrid generator, your training aircraft is capable of competing with existing piston training alternatives. With removable wings, the Axe can be transported on a trailer giving Flight training organisations ultimate flexibility on where they train students.

Safety

Multiple motors enables you to have redundancy in critical flight phases. If one motor fails - you can still fly safely. Compared to a single engine helicopter where there is only a single source of power, distributed propulsion is a proven safety feature. Furthermore, brushless electric motors compared to conventional piston or turbine engines have far fewer moving parts and critical components that can fail. Finally, with the Axe you can glide like a fixed wing in emergencies and have the back-up of a ballistic parachute.

Global training market for E-VTOL pilots

Est. £2.25 Billion up to 2028 and rising

The global aviation industry has struggled to recruit and train enough experienced pilots to fill the cockpits of airlines, business aviation and helicopter operators. There is a growing industry realisation that the development of eVTOL aircraft and launch of AAM operations will further increase demand for professional pilots commencing by 2023-2025. (CAE 2021 Report)

It is forecast that there will be a requirement for around 60,000 pilots for the UAM sector by 2028. (See McKinsey & Company report on rising pilot requirements)

With our route to certification and operating costs, running costs will remain low, giving flight schools a cost effect aircraft to train pilots in this new sector of aviation.

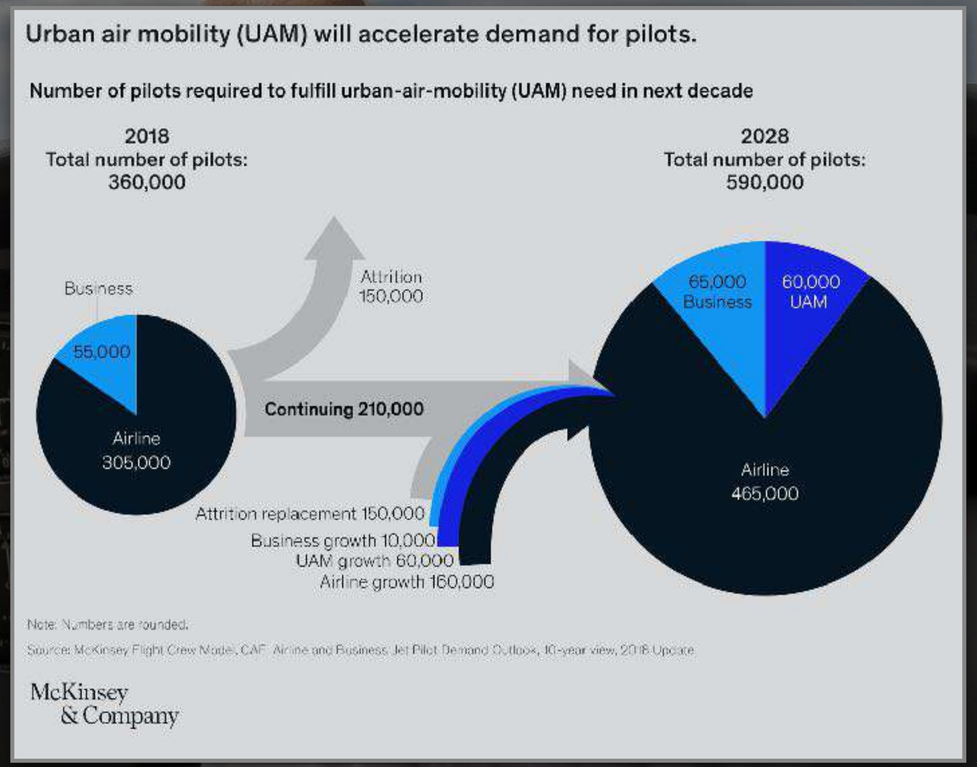

Existing E-VTOL Aircraft

Out-performing our competitors

	axe	Blackfly Opener	EHang 216
			
Range	100 miles (electric only) 200 miles (hybrid)	40 miles	22 miles
Speed	100 mph	80 mph	62 mph
Price	$180,000	$100,000-150,000	$150,000
Glide Ability	✓	✗	✗
Redundancy	✓	✓	✓
Ab-initio Training Capable	✓	✗	✗
Capacity	2 Pax	1 Pax	2 Pax

Technical Summary

Propulsion

8 individual battery-powered electric brushless outrider motors from Geiger Engineering

4 wing-end lift-points each utilising 2 end-mounted motors both powering a central rotor shaft in a single motor assembly

The duplex motor will produce 70KW peak power, 50kw continuous and weigh 16kg

Each wing-end will have a maximum continuous thrust of 137.5kg for the 2 engines, together making a total max continuous thrust of 550kg (1213 lbs).

For lift off and hover the maximum thrust available will be around 700kg (1,400 lbs)

Redundancy

Quadruple Redundant flight control system from Embention

Two motors per wing-end for motor redundancy with one motor able to take on 60 percent of the overall performance without delay

Multiple independent power sources enables the aircraft to continue flying should one battery system fail

In the highly unlikely event that you have an electrical failure, the aircraft is still controllable in the glide for an emergency landing using the mechanical control surfaces (ailerons, elevators and rudder) of the aircraft

Extended Range

The 4-twin-engine propellers are mounted on the ends of each of the 2 wings at a fixed angle.

The wing spar acts as an motor mount, the main wing support and contains the motor mounting arm. Above 60 knots, lift comes from the wings and the motors are used to propel the aircraft forwards

The design of the wing is critical because it is a major load bearing structure as well as a means of providing lift to save battery power, increased air speed.

The optional hybrid generator unit from Rotron is used to charge the batteries in flight and boost the range up to 200 miles

Aircraft Options

Ballistic parachute
We have teamed up with Galaxy GRS, the biggest European producer of parachute ballistic rescue systems aimed at ultralight aircraft. The GRS systems use parachutes, that are able to open quickly even at low speeds as well as high speed enabled by a well thought-out design. The system will weigh a total of 12.3kg installed and is rated up to 600kg with a maximum load of 750kg at 250km/h. The parachute provides our customers with another failsafe which can be used in the event of an emergency.

Factory build assist course
Owner-operators can choose to attend the Skyfly production facility on a one-week factory workshop where you assemble you own aircraft alongside our CAA-approved engineering and assembly team. This will give owners an unparalleled insight into the aircraft's inner workings, manufacturing process, and rationale behind aircraft operating procedures and limitations. It allows the user to gain considerable advantage and safety awareness and an unforgettable experience to launch your Axe aircraft ownership

Quick release wings
Bolstering our offering for private pilots and flight schools, the aircraft will have removable wings as standard that are aimed at giving as much flexibility for our clients to transport the aircraft in a trailer, and remove them for ease of storage. It also enables flight schools ultimate flexibility in where they can provide students with flight training. Further to this, the design supports our goal towards ease of ownership for our client and encouraging clients to avoid hangarage fees and store at home in their own hangar or garage.

Additional battery pack
In addition to the solid state battery system in the aircraft, an additional option for our customers is for a removable battery pack which can be used in place of the passenger seat to extend your range by at least 50%. If the owner had 2 additional packs, it would also enable you to have a battery system charging on the ground whilst you are up in the air. Depending on your charging speed, this will enable you to continue flying without waiting for your aircraft to charge.

Hybrid Generator System
Working with Rotron we are adding the option for a hybrid generator system to extend the range of the aircraft up to 200 miles. The Rotron rotary engine delivers an efficient and reliable solution for use with heavy fuels. This compact, twin rotor engine utilises advanced fuel management techniques to achieve reliability in operation, high power-to-weight ratio, low fuel consumption and reliable starting under the most extreme of operating conditions.

Suppliers

We have identified suppliers that have a proven history in aviation. By using 3rd party hardware and software, it greatly reduces our development costs and ensures we have safe, proven reliable components that will enable us to hit our build schedule on time.

Flight Control Systems

Embention have 15 years' experience in the autonomous vehicle industry, developing high-performance systems for UAVs and eVTOL vehicles in compliance with aircraft certification standards. Embention will supply the Axe with their quadruple redundant flight control system.

Propulsion

Geiger Engineering specialises in the design and manufacture of electric aircraft engines and related systems, including batteries, electric controllers and aircraft propellers. Geiger's electric motors have a proven track record over the past 5 years in proven, flying electric aircraft applications.

Hybrid generator

Rotron Power Ltd is a specialist manufacturer of advanced rotary engines. Rotron have been at the forefront of rotary engine design. The Rotron system will provide us with an unrivalled power-to-weight ratio hybrid generator system which will enable us to significantly increase the range of our aircraft.

Design and Computational Fluid Dynamics (CFD)

The aircraft has gone through several iterations of aerodynamic development and design work. The initial work focused on wing section selection and selling of the optimal angle of attack. The objective was to investigate the net drag and lift from different configurations so as to select the most appropriate configuration that would meet the performance requirements of the final aircraft.

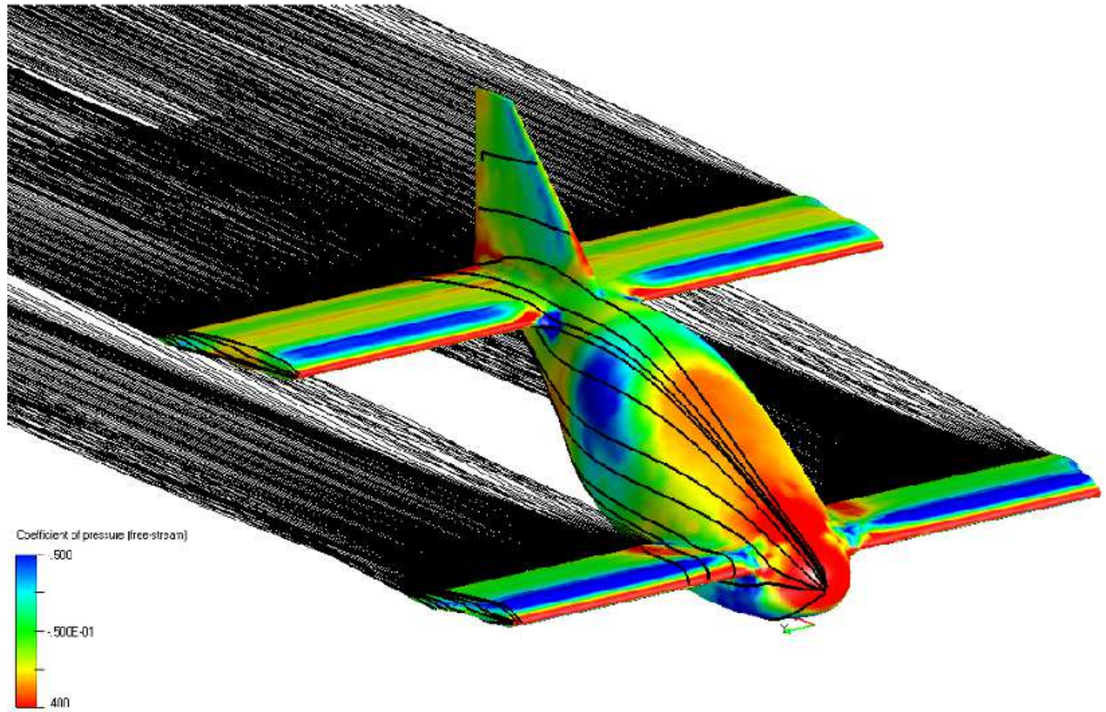

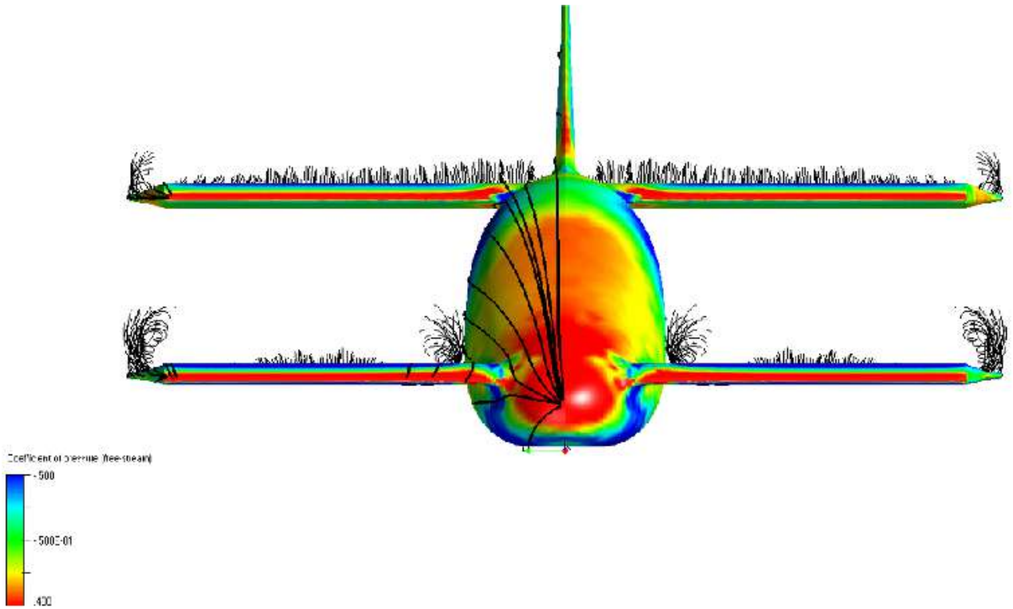

The methodology adopted involved the use of state-of-art, computer aided design (CAD) and computational fluid dynamic (CFD) tools. These commercially available software products are customised to enable a matrix of possible flight conditions to be analysed. The knowledge gained on the configuration enabled data release for tooling of a 1/3 scale development prototype (unmanned). The images featured on this page show extracts of the above process. The colour contours indicate surface pressures which are converted into lift and drag. A number of findings from our CFD work have led to us identifying patentable performance enhancing features within our design which further set us apart from our competitors.

Proof of concept - Axe Prototype

We have successfully built and run a test programme on the prototype Axe aircraft.

The prototype was built using custom tooling and composite construction methods that replicate our full scale prototype. Through doing this, we have been able to fine tune the build process to maximise the quality of the finish and speed of construction.

Being able to test the aircraft as a prototype proves our CFD and design work and enables us to test the projected performance of the aircraft.

The prototype has also enabled us to tune our flight control system to optimise the hover stability and transition smoothness.

The model is invaluable for rapid testing of modifications and design changes for the engineering team to work from.

Video available to view on our Youtube channel.

Timeline

2019

Initial designs and discussions

2020

CFD Analysis

Designing

Low cost prototyping in 1/10 scale

Market research

2021

Prototype aircraft built as technology demonstrator

Finalise designs and construction methods

Select partners and suppliers

2022

Testing and refining prototype

Sales pre-order programme opened

2023

Preparation of build facilities

Certification applications submitted

2024

Q4 Certification expected

Start of customer production

2025

Scale production of the Axe

Design and prototyping 5 seat certified aircraft

The Senior Management Team

Michael Thompson

Founder and CEO

Michael is an entrepreneur with a background in unmanned aircraft technologies running one of the UK's leading drone companies offering professional UAV solutions in surveying, inspection, film sectors for a wide range of large multinational agencies and blue chip organisations (the UK Drone Company Ltd). Having set-up and run the business from the start, Michael has experience running a
successful business and building a team around him that is efficient and effective. Michael's role for the past 6 years has been running all areas of the flight operations at his company and developing safety cases for CAA operational authorisations. He has over 600 hours of commercial UAV pilot experience. He is a qualified helicopter pilot rated on the Robinson R22, R44 aircraft and soon to be Airbus H130.

Dr. William Brooks FRAeS

Chief Engineer

Bill has experience in design, certification and manufacture of microlight aircraft - previously the Technical Director at P&M Aviation Ltd running the design, certification, manufacture and testing of aircraft, specialising in flex-wings but also composite structures. (Overseen sale and manufacture of 2,000 aircraft now in service.) Aeronautical engineering and certification consultancy. (Clients include Rolls Royce, Westlake, Pegasus Sport Aviation Ltd and GS Aviation Ltd).
Degrees in Industrial Design, Aircraft Design, Cranfield University – MSc. PhD – Field of Study: Aircraft Design, Composite Structures. He has now flown 3,700 hours in a mixture of hang gliders, microlights and light aircraft. He has been chairman of the RAeS human powered flight group for 20 years.

John Wighton FRAeS

Structures and Certification

John has over 35 years of experience in the aerospace industry. His first consultancy business was started in 1988, encompassing over 250 projects to date. He has also been appointed in several senior roles, including Chief of Stress at Pilatus Aircraft, Switzerland and Head of Certification at Assystem and Lead Technology Manager at Fokker Aerostructures. He holds a number of delegated technical signatures, for stress (level 2) and FEM with Airbus (A380 and A350) and previously headed up both CAA E1/E2 and EASA 21J design organisations. He is a Fellow of the Royal Aeronautical Society. John most recently has been involved with aircraft design and perform engineering analysis (stress) for Rolls Royce and the ACCEL programme.

Jaap Rademaker

CCO, Board Member and Investor

Jaap is a lawyer and economist who began his career at Dutch law firm Loyens & Loeff, later becoming an investment banker in 1999 with JPMorgan and Deutsche Bank in London. Since 2011, Jaap has run his own boutique financing firm, with a focus on financing new and developing green technology. He enjoys the challenge of getting these potentially impactful projects off the ground and seeing them through to completion, using his financial structuring experience to find solutions and implement commercial strategies. Jaap has a track record of successful transactions, including turning distressed small and medium-sized enterprises into sector leaders with highest-in-class profitability, and growing a number of sustainable tech innovators from an idea to profitable exit or listing. He is also a pilot with 25 year's experience who commutes around Europe for his work with his own high-tech but eco-friendly small aircraft.

Production facility - Partnership with Tuthill Porsche

- Richard Tuthill, owner of road, rally and race car manufacturer Tuthill Porsche, has joined the Skyfly team
- The partnership looks to strengthen Skyfly's affinity with high-end automotive production methods and light-weight engineering practices
- Richard Tuthill brings a wealth of production and engineering experience to Skyfly as well as a broad network of clients and suppliers
- Tuthill Porsche have a track record transforming cars from shells into bespoke high-performance, fully spec'd rally and race cars in a matter of days
- Richard Tuthill is a private pilot with a keen interest in personal air transport
- With Richards support, initial production of the aircraft will take place in near Banbury, Oxfordshire at Tuthill Porsches state of the art manufacturing facility.

Regulatory Environment

The main certifying body for aircraft in Europe - the European Union Aviation Safety Agency (EASA) - has released a set of special conditions for E-VTOL aircraft which provide companies with an outline route to gain certification. This will enable aircraft to be used and sold both privately and commercially.

This is the route that our competitors are taking to gain certification. However this process is proving time consuming and expensive, with launch dates being pushed back.

Skyfly's approach is to initially bypass this route to market and certify the aircraft under existing light aircraft regulations (via the Light Aircraft Association) saving us a huge amount of time and expense.

Our approach to certification for our first aircraft, is via the British Civil Aviation Authority (CAA). Specifically, our aircraft falls under the airworthiness regulation group of Small Light Aircraft (BCAR - Section S) as a kit-built aircraft.

This is a less regulated category that will enable us to gain a permit to fly and sell our aircraft in a fraction of the time to the General Aviation market (private owners).
Most importantly, this category of certification has moved from 450kg maximum take-off mass (MTOM) to 600kg MTOM making it feasible for our aircraft to be certified in this class.

The CAA has identified that General Aviation is the foundation for air transport and aerospace recruitment – hence development in this sector has been largely deregulated and innovation encouraged.

In relation to the kit-build element of our aircraft, "the 51% Rule" is a term commonly used. It requires the owner, rather than the manufacturer, to perform the majority of the fabrication and assembly in order to be issued with a Certificate of Airworthiness.

Our customers will join us at our manufacturing facility and participate in a 1-week construction course to build the aircraft with one of our engineers.

This is the market that we will operate in initially, in order to build a market reputation and develop an aircraft in an inexpensive way, with a view to entering the certified market as the industry matures.

Our aim is to have the advantage of successfully proving the concept in this category and being the first business to build and sell an E-VTOL aircraft in the UK.

Permit Aircraft for Flight Training

CAA regulation on permit aircraft being able to carry out flight training changed in 2020 with the release of ORS4 No.1271. This enables new owners to be trained on their own permit aircraft and existing license holders to be able to carry out training and differences training on permit aircraft.

Extract from CAA:

"After substantial consultation with internal and external stakeholders, we now allow flight instruction and self-fly hire to utilise aircraft flying in accordance with a National Permit to Fly subject to specified conditions. This relaxation has been published through an additional General Permission and is designed to sit alongside the General Permission already in place for Type Approved microlight's and gyroplanes.

This permission does not apply to flight instruction and examination where the recipient does not hold a licence, except when the recipient is:

- The registered owner or joint-owner, or
- A registered shareholder of the company of which owns the aircraft, or
- Is the spouse or child of a registered sole or joint owner."

Light Aircraft Association collaboration

Skyfly is working with the Light Aircraft Association on various aspects of the certification and pilot licensing of the Axe aircraft. The LAA are the UK's principal representative body for amateur-built and light aircraft.

By working with the LAA, we gain access and are able to collaborate with the LAA design and engineering teams.

Their organisation is delegated by the CAA to cover a number of vital areas that are fundamental to the Axe development programme and eventual role out. Areas we will be using the LAA:

- Testing under E-conditions
- Certification under BCAR sections S with LAA recommendation to the CAA on what additions to existing framework needs to be added to satisfy CAA for our aircraft and indeed further E-VTOL aircraft.
- Establishing a basis for pilot licensing under NPPL regulations with differences training

Skyfly has received a letter of support from the LAA to show our stakeholders that we have the backing, knowledge and contacts of the LAA to support us on our path to certification. (Letter appended)

Base price	£150,000
Factory assisted build	£20,000
Range extender generator	£50,000
Ballistic parachute	£20,000
Additional battery pack	£25,000

Prices exclude VAT and are subject to change to fall in line with inflation and change of suppliers.

You have arrived. Faster, greener, safer, smarter.

SKYFLY

Appendices

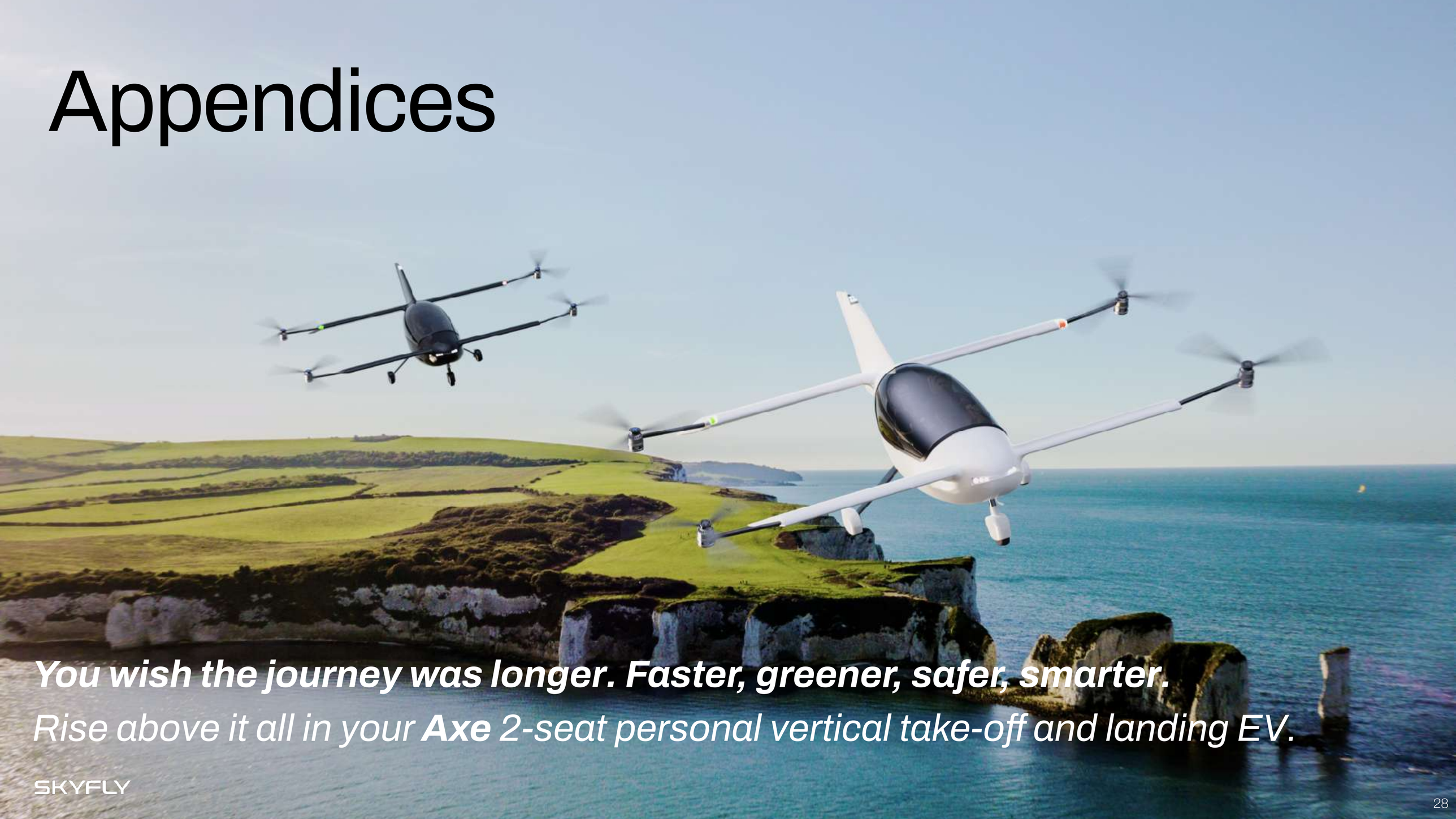

You wish the journey was longer. Faster, greener, safer, smarter.

*Rise above it all in your **Axe** 2-seat personal vertical take-off and landing EV.*

SKYFLY

Noise Profile

Recordings made by NASA engineers have demonstrated an acoustic profile for an electric vertical take-off and landing aircraft **below 65 dBA which** represents a noise level comparable to a normal conversation at a distance of 330 feet from the flight path.

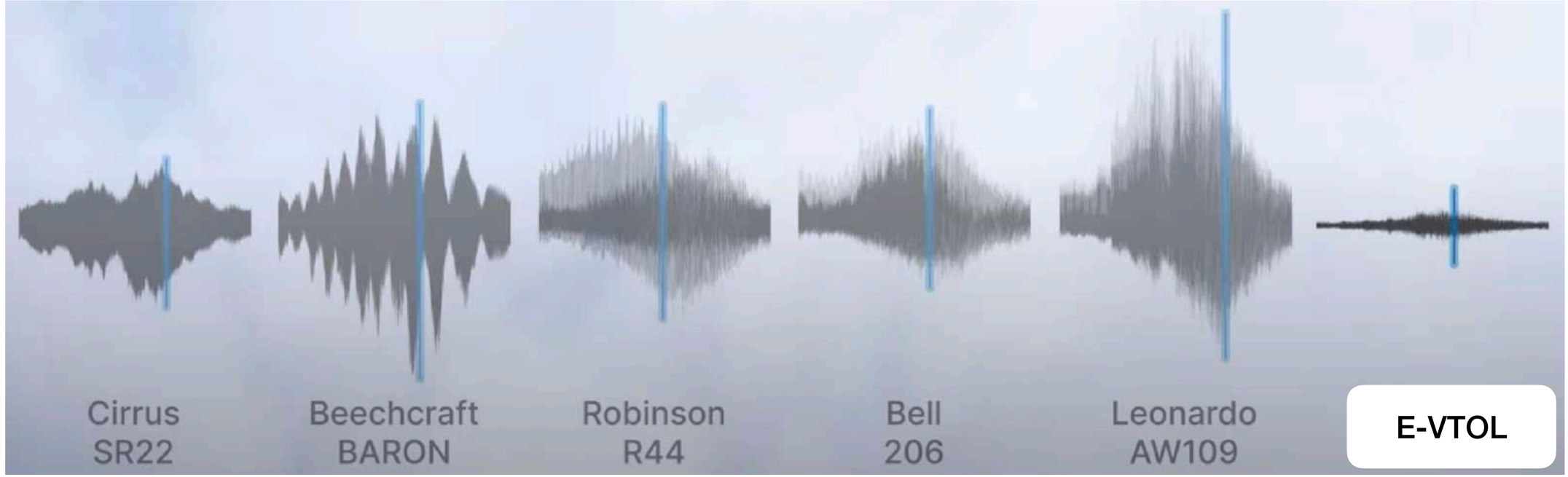

Source

Common Questions

By not going for a commercial certification are you compromising the safety of the aircraft?

Although a Permit to Fly is often thought of as embodying a lesser standard of airworthiness than other forms of certified aircraft, a Permit to Fly will only be issued on the basis that the aircraft to which it relates is airworthy.

Our aircraft will be designed to EASA certification requirements. Our process will use a building block approach focussed around safety i.e. initial prototype testing under E conditions followed by approval under a national CAA permit to fly.

What maintenance is required?

A maintenance manual will be issued for our aircraft containing the information that is essential for maintenance including frequency and extent of inspections. Due to the simplicity of our design, components and construction, the maintenance on this aircraft will mainly be limited to motor bearings, battery pack and propeller components.

What pilot license is required?

Due to the unique nature of the design, we will have our own training programme which will cover specific control characteristics of the Axe. Because our aircraft is a 2 seater configuration and unique fixed wing design - it not only allows for ab-initio training, but also enables us to provide conversion training from existing Light aircraft PPL/NPPL/LAPL pilots and Helicopter or gyro PPL pilots. We aim for new pilots to be licensed with a NPPL (M) with differences training to the Axe type for the vertical aspects of the flight envelope.

Can the permit aircraft be flown outside of the UK?

In 1980 many countries in Europe agreed to recognise each other's Permits to Fly in the '1980 ECAC' agreement. Therefore the aircraft can be flown without restrictions in and and around Europe with ease. For European countries not in this agreement, and countries in Asia, US and Africa, individual applications need to be made to the aviation governing body of that country.

Technical specifications

Canard Span	5m canard (chord - 0.8m)
Wing Span	5m wing (chord -1.2m)
Maximum all up weight	600kg
Empty weight	220kg (equipped for flight less batteries and occupants)
Payload	172kg (2 pax)
Installed power	8 x 35kw motors = 280kw peak
Batteries	208kg = 48kwh
Hybrid	117kg batteries/fuel 55kg hybrid power plant
Rotor diameter	4 x 1.5m (3 bladed fixed pitch)
Rotor Angle	Fixed
Hover Power Required	140kw
Undercarriage	Tricycle (conventional fixed wing)
Stall Speed	48mph
Power off sink rate	570fpm at 70mph
Best Glide Angle	9:1
Climb	2300fpm at 70mph
Runway Length Required	0m - VTOL (vertical take-off and landing) 50m - STOL (short take-off and landing) 300m - Glide and power off landing

Disclaimer: Commercial terms not formally agreed with our suppliers. We are always looking for the best in class components and therefore pricing and specifications can change accordingly.

Dimensions (mm)

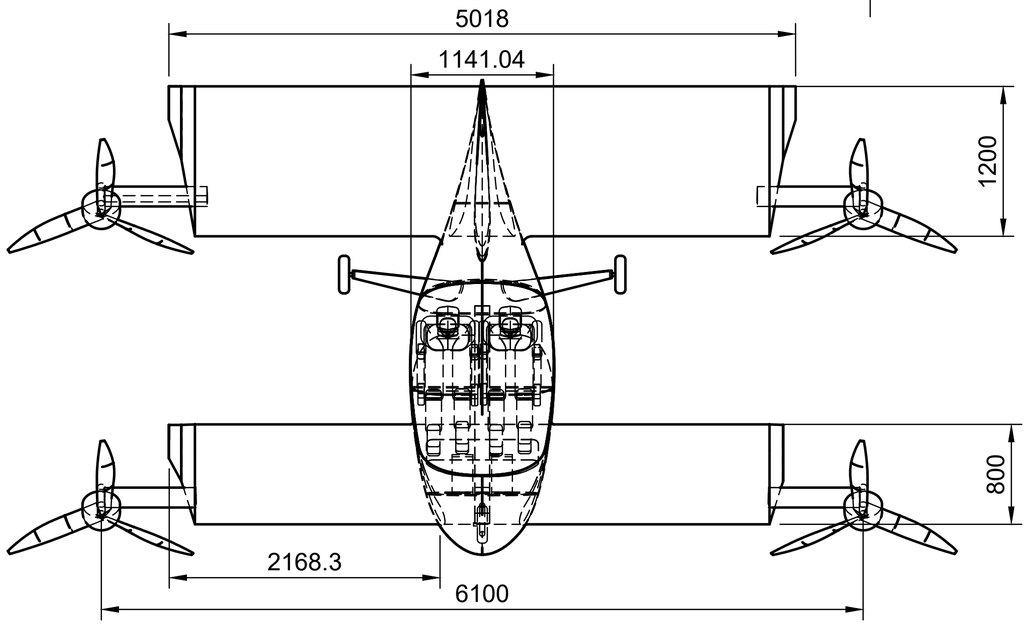

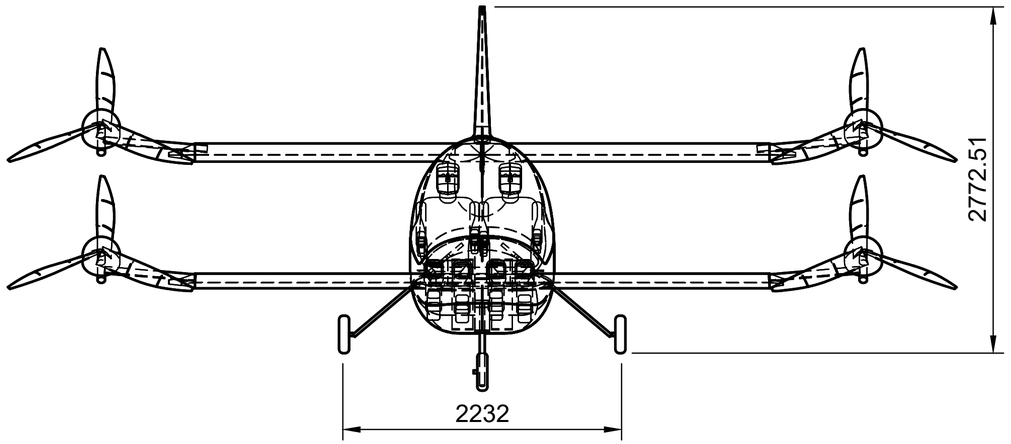

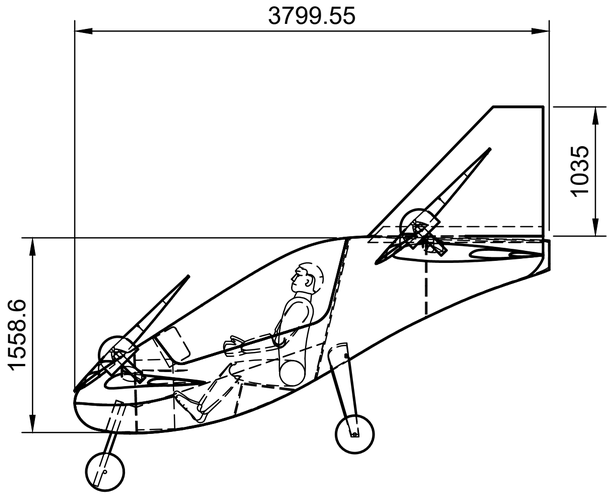

Dept.	Technical reference	Created by	Approved by
		W Brooks 30/6/22	
		Document type	Document status
		Title: Axe EVTOL Layout	DWG No.
			Rev. / Date of issue / Sheet 1/1

SKYFLY

Trailer Dimensions (mm)

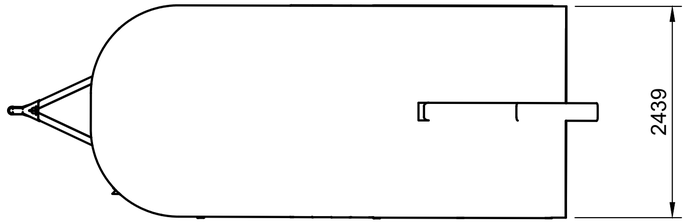

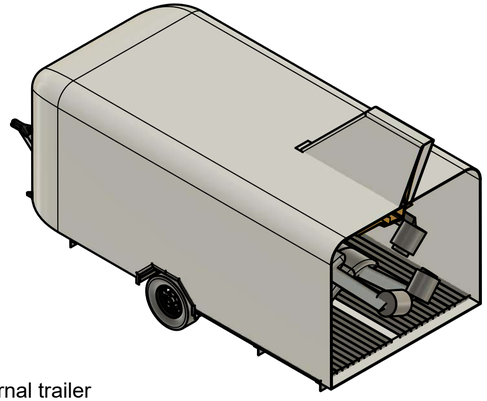

minimum internal trailer width 2120mm. Limited by outsides of spats with the undercarriage statically deflected.

Fin can be removed if desired to reduce headroom

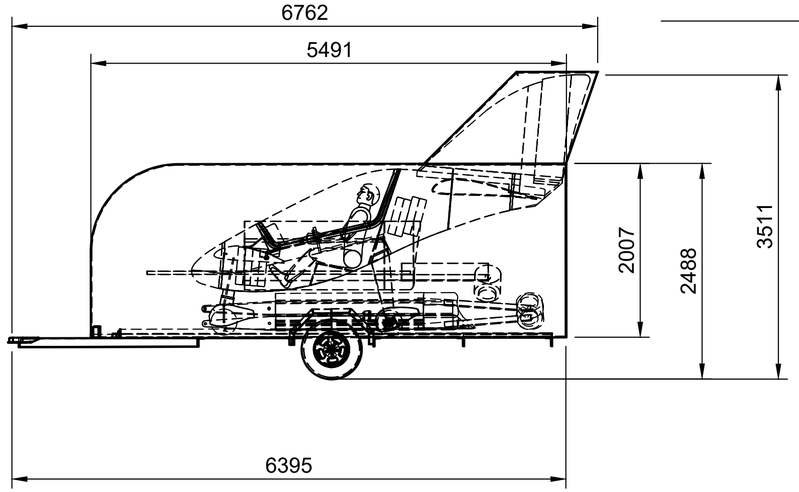

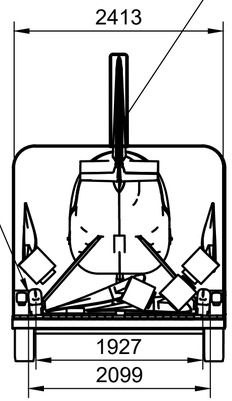

Dept.	Technical reference	Created by W Brooks 25/10/2022	Approved by
		Document type	Document status
		Title Axe+trailer2	DWG No.
			Rev. / Date of issue / Sheet 1/1

How do you vertical take-off in the Axe?

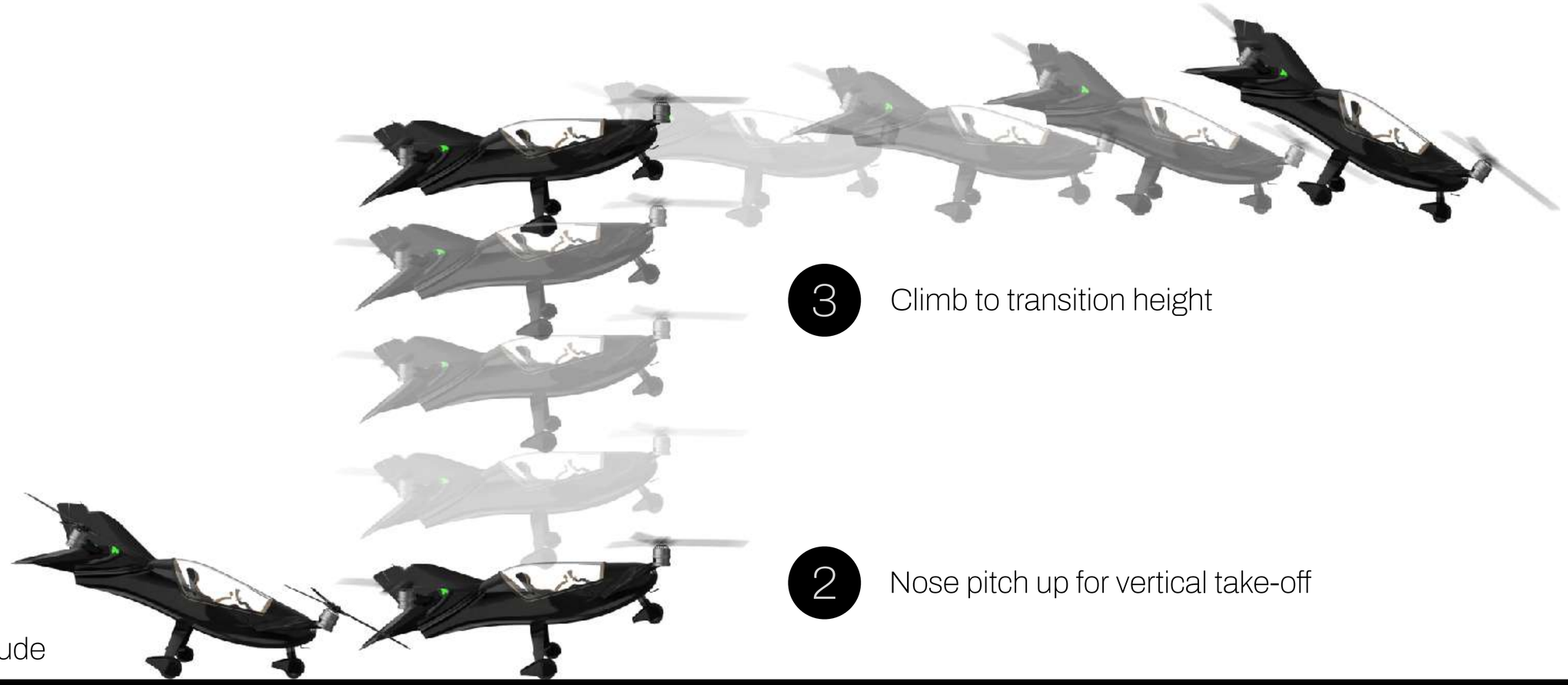

4 Transition to forward flight

3 Climb to transition height

2 Nose pitch up for vertical take-off

1 Ground Attitude

Note:
If space allows, towering take-off not required. Build up airspeed to 60kts as quickly as safe to do so.
Short take-off and landing (STOL) with a shallower and progressive climb to 60kts fixed-wing transition speed.

Flight Control System

The Veronte 4x is the chosen redundant flight control system for the Axe aircraft. The Veronte 4x features a fail-operational redundant architecture that has been designed for avoiding a single point of failure managed by a dissimilar arbiter board. The flight control system is certified to DO178C / ED-12 and DO254 aviation standards.

The flight control system can also be configured with a 4G module in the control system for integrating with online databases for air traffic and weather information. The flight controller is also compatible with a variety of collision avoidance sensors such ADS-B, radar or LIDAR.

Safety & Reliability	
No SPOF	No single point of failure | Robust to arbiter failure
3x Redundancy	Embedded triple redundancy
4x Redundancy	External autopilot core | Main controller or fail-operational unit
Redundant power input	Up to 4 independent inputs
FTS (Flight Termination System)	Dissimilar microprocessors & regulation stages | Automatic or manual activation
Internal redundancy	Redundant communication bus | Kill me function on each core
Custom voting logics	Configurable voting logics and strategies
Reliability documents	DDP: Declaration of Design & Performance ATR: Acceptance Test Results COC: Certificate Of Compliance
Manufacturing process	Strict Acceptance Test Procedure (ATP) | Conformal coat
ESS (Environment Stress Screening)	Temperature and vibration circles for early failure detection
DO160 & MIL-STD-810 Environmental test	Temperature, temperature variation, altitude, shock, vibration
DO178C Software reliability	DAL-B
DO254 Hardware reliability	DAL-B
Certification data pack	PSAC, SDP, CMP, SQAP, SVP, HVVP, HCMP, HPAP, TTR, SVCP, SQAR, SCI, SECI, SRD, TD, SVR, SCMR, SAS, PR, HRD, HDD, HTP, HVVR, HCMR.
Certification support	Dedicated engineering support
Software testing	24/7 testing environment | Custom test for specific PDIs | Iron bird setup
MTBF	4×10^7 MTBF | Project-based MTBCF calculation
Configurable failsafe	Custom events and actions | Multiple safety levels
Warnings	Visual & sound alarms | Customizable
User access level	Unlimited users | Custom permissions

Sensor	
Redundancy	Redundant sensors on each autopilot core
9x Barometer	3x 0 to 103 kPa | 3x 1 to 120kPa | 3x 30 to 110 kPa
3x Pitot	3x 0.003kPa (5kt 8km/h sea level) to 6.9kPa (206kt 382km/h sea level) | Up to 1570kt 2900km/h with optional external sensor
6x Accelerometers (3 axes)	6x ±16G | 3x ±24G | Sustained manoeuvre (peaks up to ±32g)
6x Gyroscopes (3 axes)	9x 125 to 2000 deg/sec (compensated)
6x Magnetometers (3 axes)	6x 16 gauss | 3x 8 gauss
6x GPS	GPS, BeiDou, GLONASS | RTK | GNSS-based Attitude
4x Voltage	4x Input voltage sensor
3x Temperature	3x Internal temperature sensor
External sensors	Enhanced compatibility | Navigation fusion

Propulsion components

HPD50 Duplex redundant electric motors

The motors in the Axe are from Geiger engineering and are electric aero-motors. Two mechanically and electrically separate individual motors work without gears on a propeller shaft, so that if there is a fault in one powertrain, the aircraft can continue its flight as normal.

Features:

- 42 suction drillings directly next to the motor windings allow for effective cooling through radial fans right the source of the heat
- Closed surface at the top of the motor ensures no foreign bodies enter the motor windings
- The usage of high-quality neodymium magnets, fully-processed electrical sheets of highest quality and allow airflow with smallest air gaps completes this high tech motor.
- Continuous communication between HMI <-> Battery <-> Power inverter which enables careful regulation by linked self-test routine and cascaded regulation and safety processes

MC300 – Four-quadrant motor controller

Tailored to the motors, Geiger Engineering presents a new generation of motor controllers, which offer a range of functions specially for manned electric flight not available up to now on the market.

Features:

- High power density at low voltage level 60VDC (PELV) 300A – 600A continuous for 30 seconds
- Robust and modular construction
- Integrated functions specific for flight applications:
  - Adjustable airscrew control via airscrew characteristics
  - Airscrew positioning, electronic cams
  - Integrated release switching, Quick stop functions (parachute emergency stop, Virtual Coach etc.)
  - Reversing as use as airbrake or for manoeuvring.
  - Cycle frequency management, and motor, battery and inverter temperature management to maintain availability if limit values are exceeded.
  - Integrated automatic self-test functions of battery, inverter and motor before each start

Master-Slave operation of two PI300 modules possible to extend power to 600A cont. / 1200A for 30s and to increase availability

Full four-quadrant operation (Recuperation, Traction)

Universal interfaces (Encoder, Hall sensors, RS485, RS232, analogue and digital activation)

ROTRON

50 KW Hybrid Generator

Increase endurance up to 2 hours
50KW continuous power
55kg all up weight

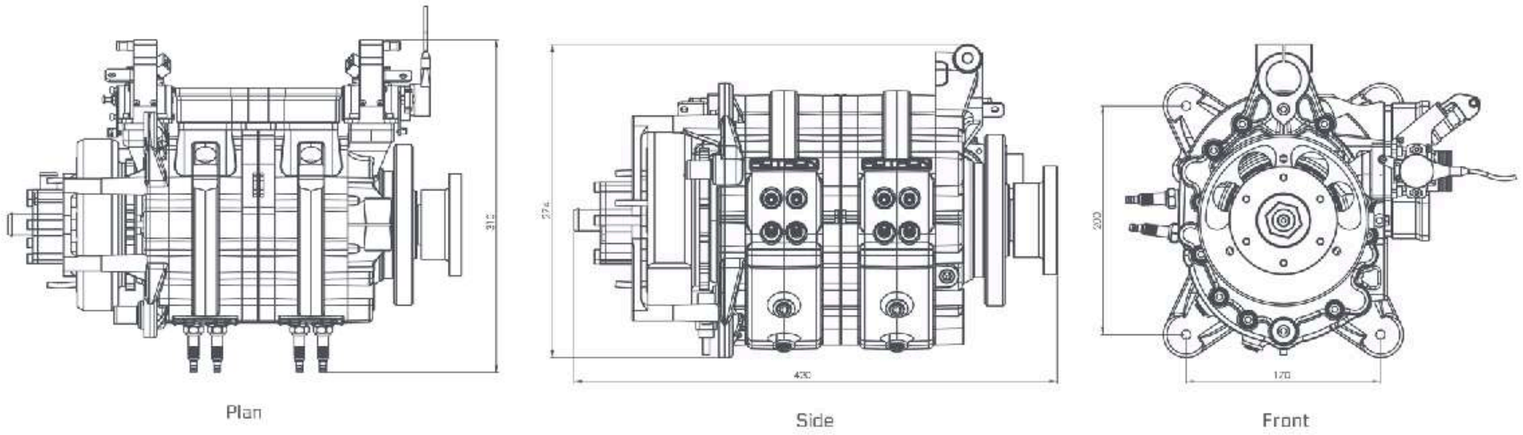

Working with Rotron we are adding the option for a hybrid generator system to extend the range of the aircraft. The Rotron rotary engine delivers an efficient and reliable solution for use with heavy fuels. This compact, twin rotor engine utilises advanced fuel management techniques to achieve reliability in operation, high power-to-weight ratio, low fuel consumption and reliable starting under the most extreme of operating conditions.

- For use with JP5, JP8 and Jet A1 heavy fuel
- High power-to-weight ratio with increased efficiency
- Compact package size allows greater fuel and payload flexibility for multi-mission capability
- Low levels of torsional and zero radial vibration at mid-to-high rpm range
- Fuel injection and ECU controlled altitude compensation fitted as standard
- Higher endurance lifecycle

Completed Engine TBO (Time between overhaul)

1000 hrs

Rotron continues to raise the benchmark for capability, endurance and reliability of their rotary engines by going beyond their original scoped service life.

Ballistic Parachute - Galaxy GRS

Model name		GRS 6 600 SD Speedy FF 115m
Total safety coefficient of the canopy by ASTM F2316-12		Test ASTM 1,5
Allowed max. operational weight **MTOW**	**Kg**	600
Allowed never exceed speed for use **VNE**	**Km/h**	380
Maximum operational opening dynamic shock at **VNE** and **MTOW**	**kN/G**	30,0
Tested total time of full canopy in **VNE** and **MTOW**	**sec.**	6,0-6,5
Overall time of full canopy stretching at the speed of **95 km/hod.** at **MTOW**	**sec.**	5,6-5,8
Descending recorded at **1000m/AMSL** **Min. Max MTOW m/s** Descending recorded at **1500m/AMSL**	**m/s**	7,1-7,3 7,3-7,5*
Maximum load at speed **250** km/h	**Kg**	750
Maximum operational opening dynamic shock at the speed **250** Km/h	**kN**	32,0
Minimum projected rescue height for horizontal fly	**m./km/h**	120/90 150/90*
Method ejection		Container Short sleeve

Canopy		
Area	**m2**	115
Number of lines and panels		26
Nominal diameter	**m**	10,6
Quantity of slots/Slider*		26/39*

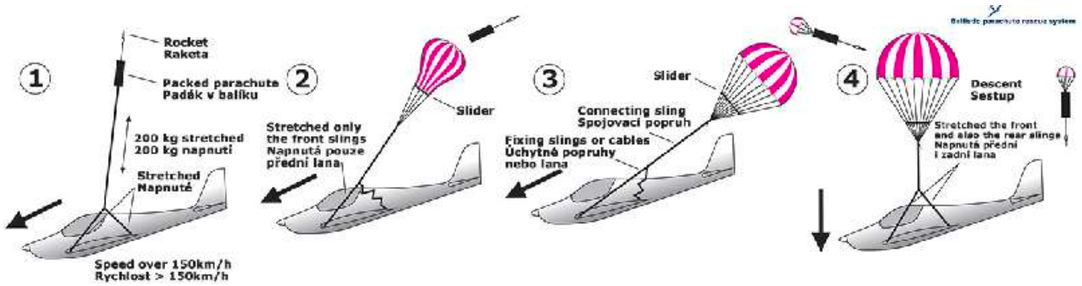

Galaxy GRS was the first and now biggest European producer of parachute ballistic rescue systems aimed for ultralights, light sport and experimental aircraft ranging up to speed of 400 Km/h.

Ballistic device	**Rocket engine MK4**
Igniter – mechanical ignition	Dual primer
Stationary rocket engine pull	670 N/sec. 68Kg
Maximum rocket engine pull	930 N/sec. 94Kg
Ballistic and drawing device weight	2.62Kg
Burn time (- 40°C - +60°C)	1 sec. ± 0,2 sec.
Cycle Exchange	6 years

Dimensions		
Dimensions B1-B15 in products	**mm**	B1-B15
Weight unit - GRS	**Kg**	11,5
Drawing sling length weight	**m.** **Kg**	5,5 0,74
IN/OUT #/ Soft R + (0,75kg)	**Kg**	---
Total weight±4% GRS Soft B GRS Soft B2	**Kg**	12,3

Mr. M. Thompson
Skyfly Technologies Ltd
London
SW6 3BU

1st June 2022

Dear Michael

I am pleased that the LAA is in a position to support the Skyfly project, with our engineering team working with you to develop means of engineering verification and compliance with the Civil Aviation Authority regulation, allowing this hugely exciting project to take to the skies.

We look forward to working with you, as Skyfly's technology is very much in line with the spirit of innovation which is a key part of our Association's DNA. Skyfly has the potential both to revolutionise sports and recreational aviation, and to also build for the future in terms of new, sustainable air transport concepts.

Here's to the next steps to get Skyfly` airborne!

Stephen Slater
CEO
Light Aircraft Association

Registered Office and Company Address:
Turweston Aerodrome, Nr Brackley, Northants, NN13 5YD
Tel: +44 (0)1280 846786 Fax: +44 (0)1280 846780
Email: office@laa.uk.com or engineering@laa.uk.com Web: www.laa.uk.com

Light Aircraft Association

Less time, more joy, amazing views.

Fly in style with your Axe 2 seat personal vertical take-off and landing EV.

Pre-order now for delivery 2024.

Email michael.thompson@skyflytech.com / jaap.rademaker@skyflytech.com

SKYFLY